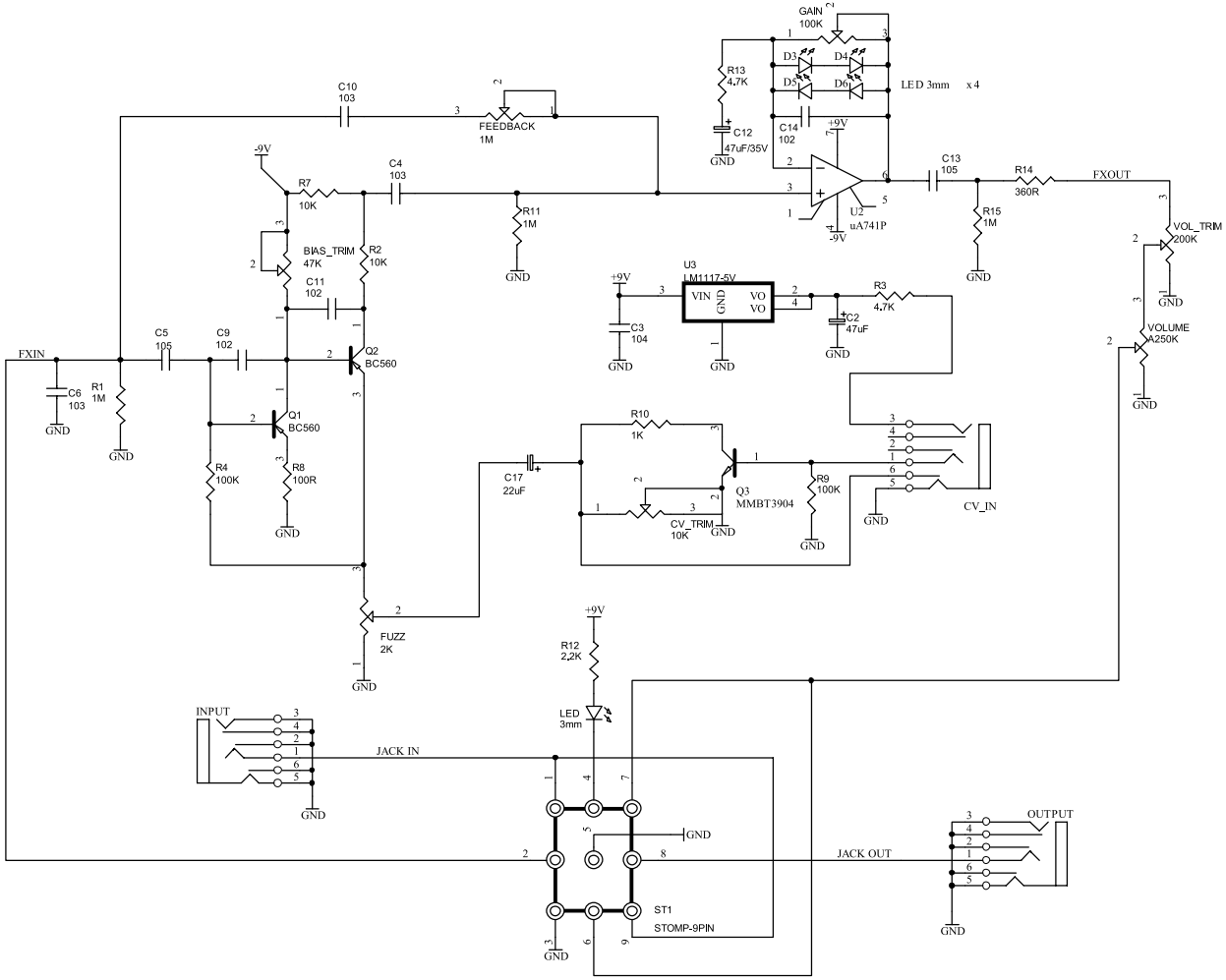

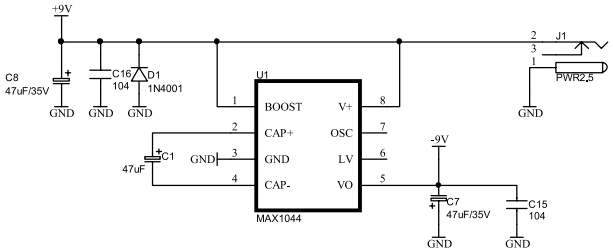

Strakal Brulu ! {taol evezh}

FX & Modules from Plougastel / France

2015 TouellSkouarn.fr